Features

- 0805 1.1mm SMD LED
- High Brightness
- AlInGaP / InGaN Technology
- Small package
- High reliability
- Clear Lens

Applications

- Consumer Electronics
- Wearables
- Automobile After Market
- Industrial Equipment

Description

The IN-S85TATRGB is a tri-color 0805 package with versatile design capabilities. It is a PCB type molding style LED which can be used in various applications.

Recommended Solder Pattern

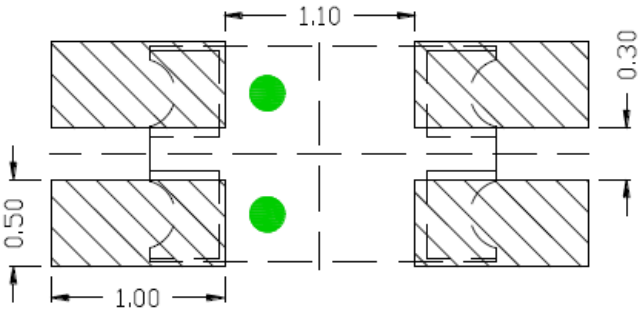

Figure 1. IN-S85TATRGB Solder Pattern

Package Dimensions in mm

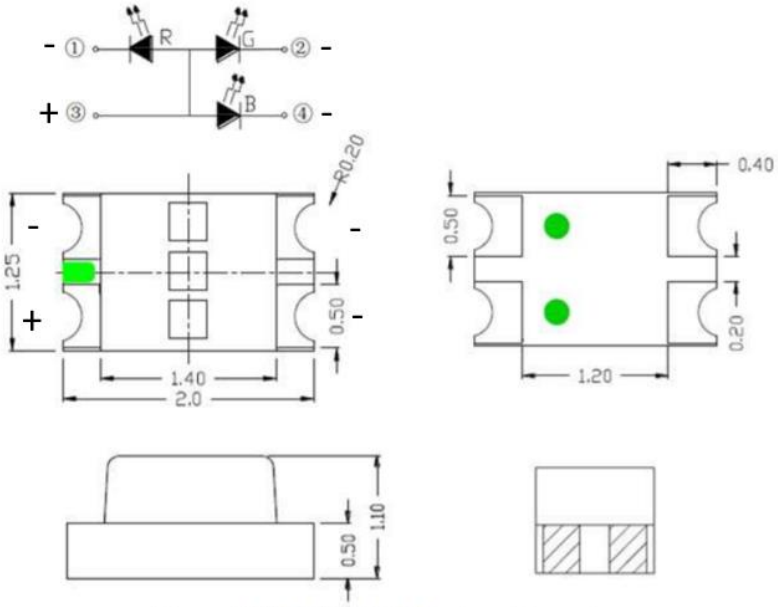

Figure 2. IN-S85TATRGB Package Dimensions

Notes.
1. All dimensions are in millimeters.
2. Tolerance is ± 0.10 mm unless otherwise noted

Figure 2. IN-S85TATRGB Package Dimensions

Absolute Maximum Rating at 25°C (Note 1)

Product	Emission Color	P_d (mW)	I_F (mA)	I_{FP}* (mA)	V_R (V)	T_{OP} (°C)	T_{ST} (°C)
IN-S85TATRGB	Red	75	25	70	5	-30°C~+85°C	-40°C~+90°C
	Green			100			
	Blue			100			

Notes
1. Condition for IFP is pulse of 1/10 duty and 0.1msec width

ESD Precaution

ATTENTION: Electrostatic Discharge (ESD) protection

The symbol above denotes that ESD precaution is needed. ESD protection for GaP and AlGaAs based chips is necessary even though they are relatively safe in the presence of low static-electric discharge. Parts built with AlInGaP, GaN, or/and InGaN based chips are STATIC SENSITIVE devices. ESD precaution must be taken during design and assembly.
If manual work or processing is needed, please ensure the device is adequately protected from ESD during the process.

Please be advised that normal static precautions should be taken in the handling and assembly of this device to prevent damage or degradation which may be induced by electrostatic discharge (ESD).

Electrical Characteristics $T_A = 25℃$ (Note 1)

Product	Emission Color	I_F(mA)	V_F(V)		λ(nm)			Viewing Angle	I^*_V(mcd)
			typ.	max	λ_D	λ_P	△λ	$2\theta_{1/2}$	typ.
IN-S85TATRGB	Red	20	2.0	2.2	622	625	20	130	200
	Green	20	3.1	3.4	521	523	35	130	520
	Blue	20	3.1	3.4	467	470	30	130	140

Notes
1. Performance guaranteed only under conditions listed in above tables.

Typical Characteristic Curves – YG, Y, A, R

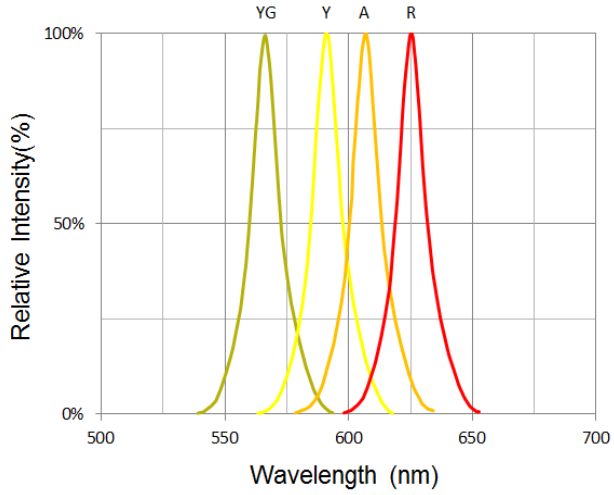

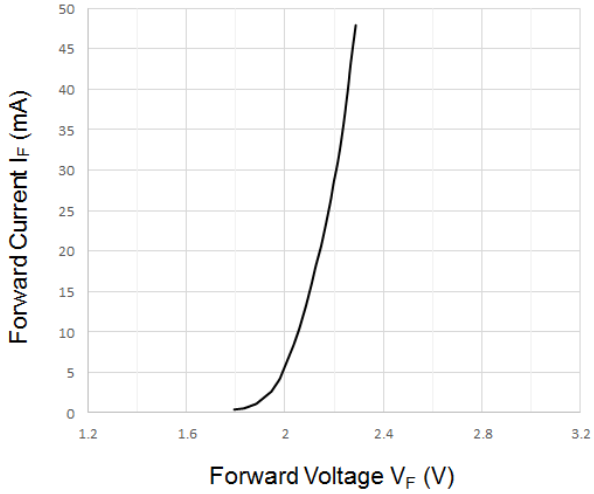

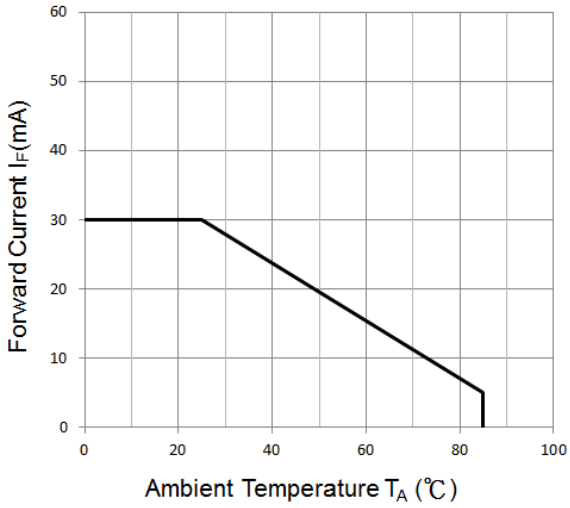

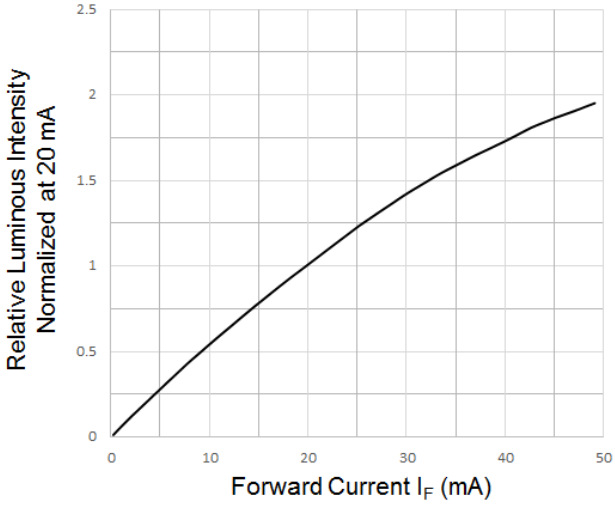

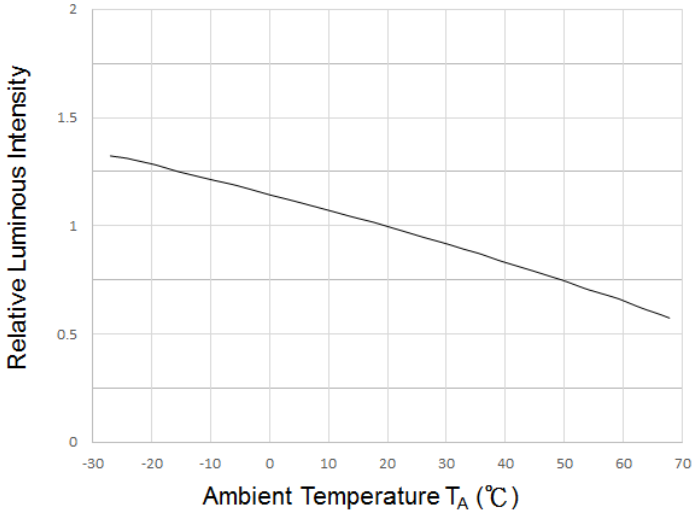

Typical Characteristic Curves – B, G, W

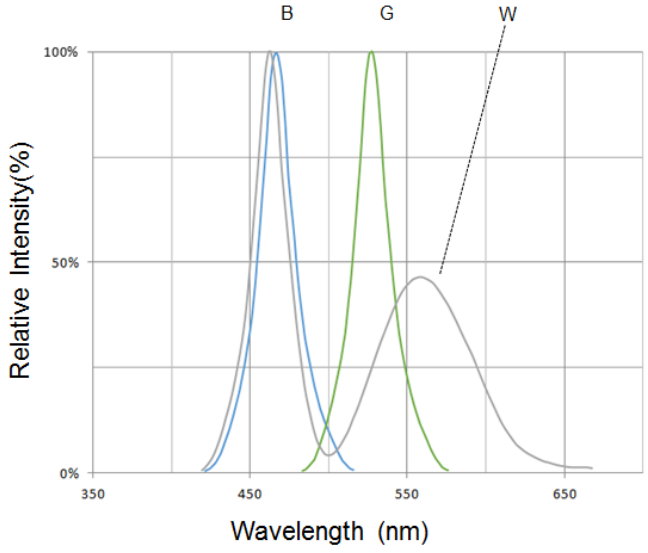

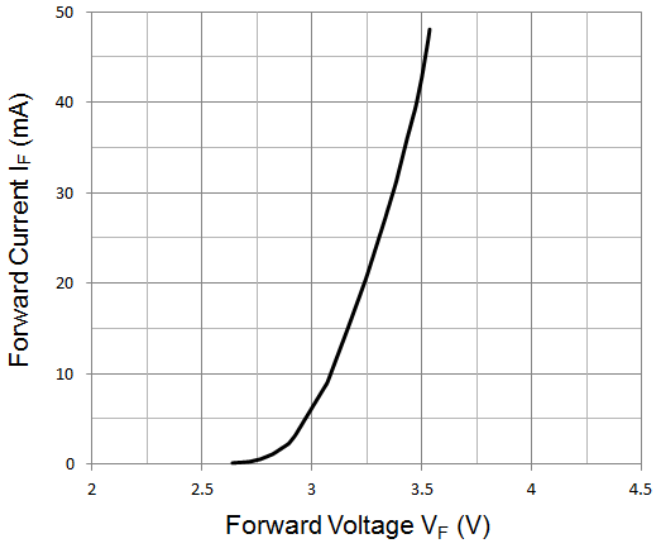

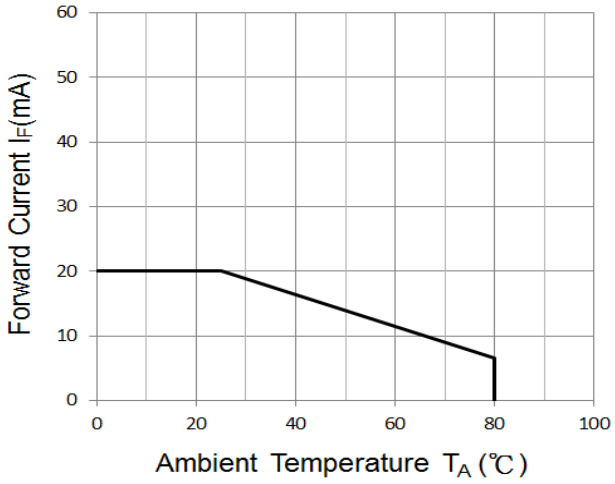

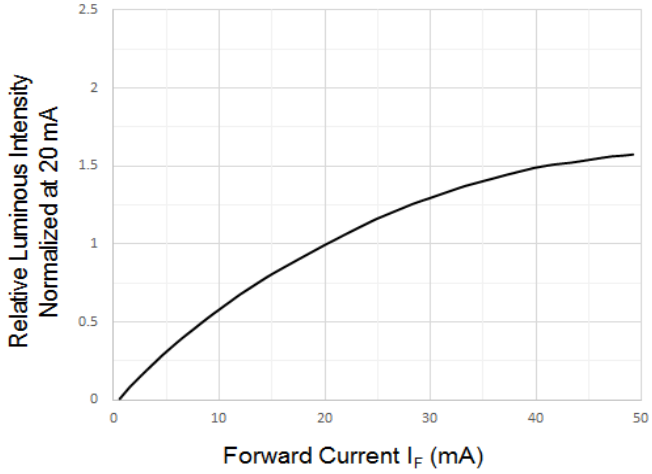

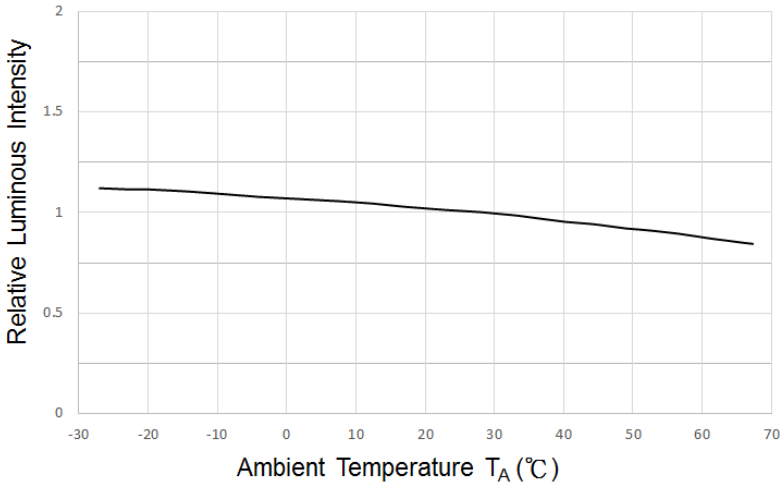

Typical Characteristic Curves – Radiation Pattern

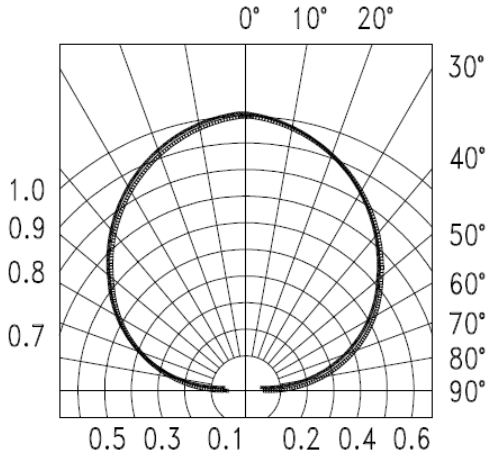

Ordering Information

Product	Emission Color	Test Current I_F (mA)	Luminous Intensity I_V (mcd) (Typ.)	Forward Voltage V_F (V) (Typ.)	Orderable Part Number
IN-S85TATRGB	Red	20	200	2.0	IN-S85TATRGB
	Green	20	520	3.1	
	Blue	20	140	3.1	

Label Specifications

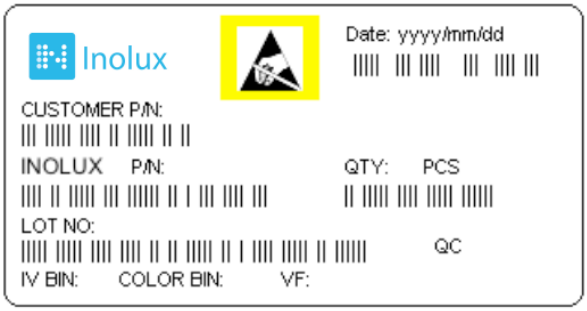

Inolux P/N:

I	N	-	S	8	5	T	A	T			R	G	B		-	-	-	-	-
			Material	Package		Variation		Orientation	Current	Lens	Color			Chip Type		Customized Stamp-off			
Inolux SMD			S = PCB Type	85TA = 2.0 x 1.25 x 1.1mm				T = Top Mount	(Blank) = 20mA	(Blank) = Clear	R=625nm G=523nm B=470nm			(blank) = Standard					

Lot No.:

Z	2	0	1	7	01	24	001
Internal Tracker	Year (2017, 2018, ...)				Month	Date	Serial

Packaging Information: 3000pcs Per Reel

Tape Dimension

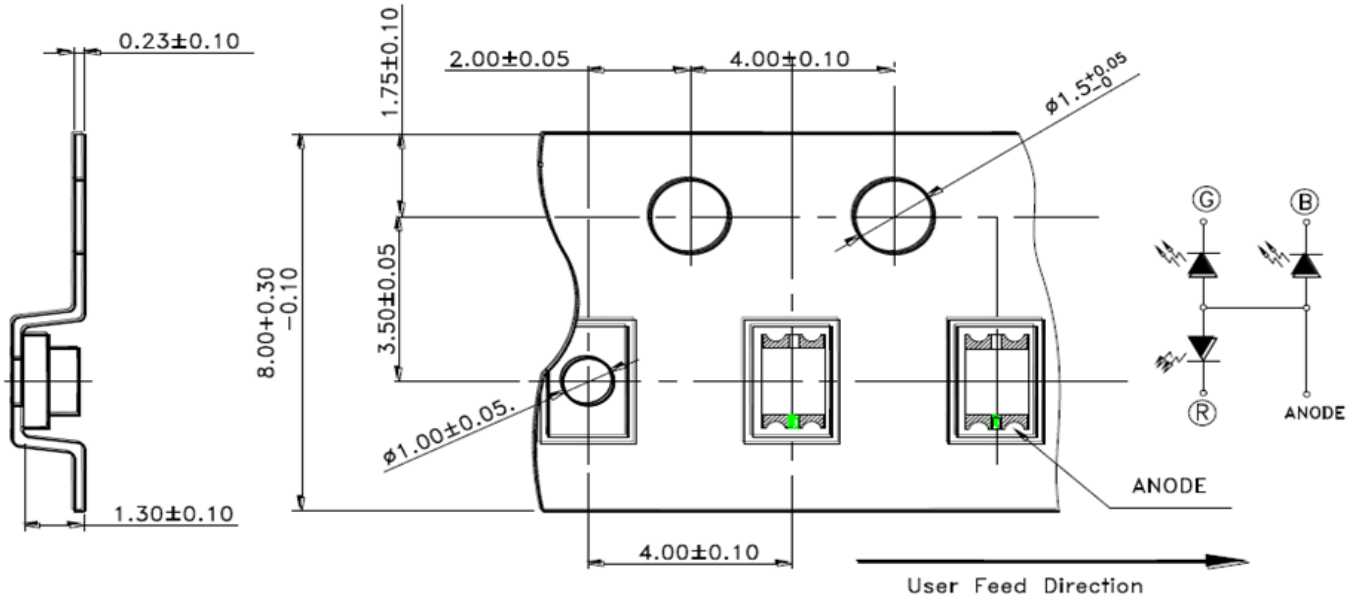

Reel Dimension

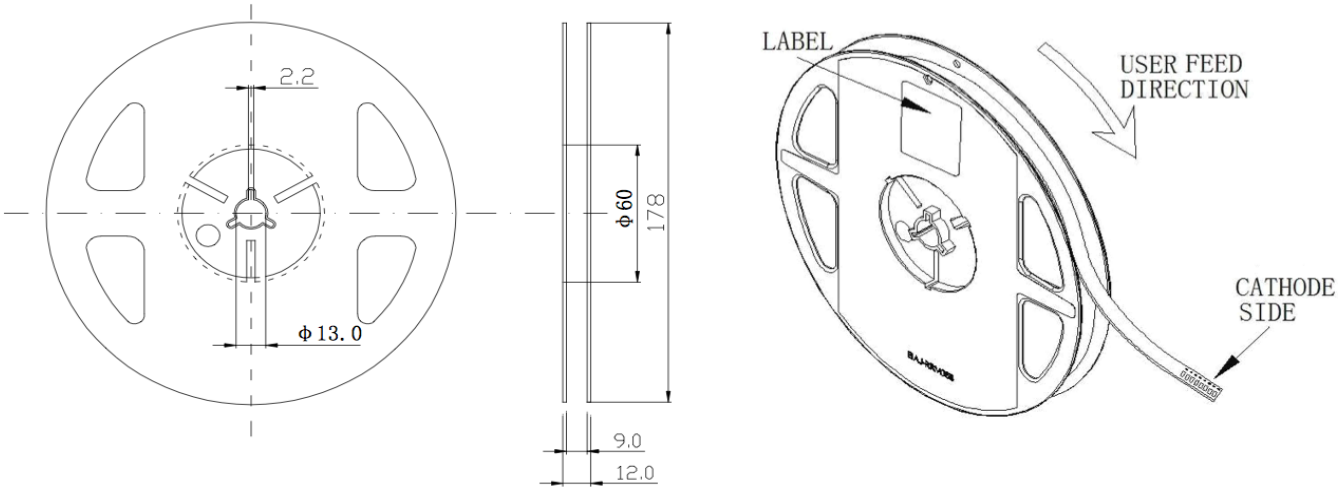

Packing Dimension

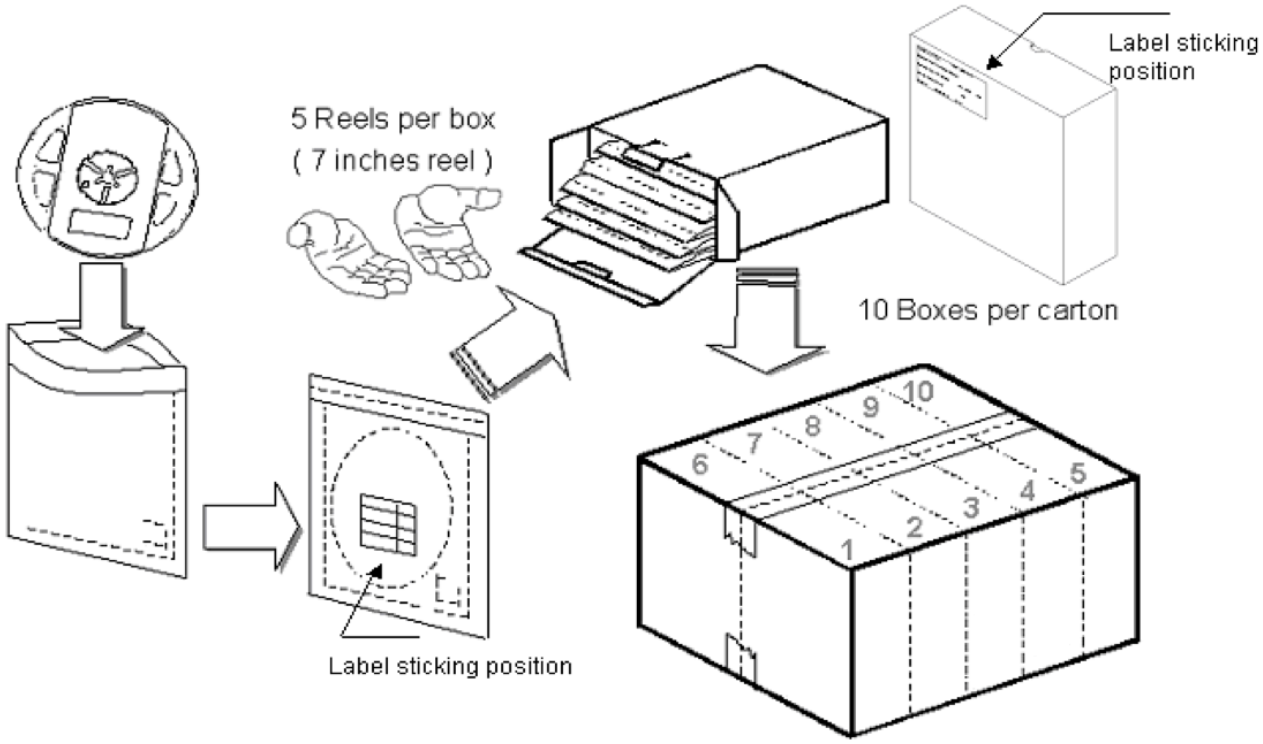

5 boxes per carton are available depending on shipment quantity.

	Specification	Material	Quantity
Carrier tape	Per EIA 481-1A specs	Conductive black tape	3000pcs per reel
Reel	Per EIA 481-1A specs	Conductive black	
Label	IN standard	Paper	
Packing bag	220x240mm	Aluminum laminated bag/ no-zipper	One reel per bag
Carton	IN standard	Paper	Non-specified
Others: Each immediate box consists of 5 reels. The 5 reels may not necessarily have the same lot number or the same bin combinations of Iv, λ_D and Vf. Each reel has a label identifying its specification; the immediate box consists of a product label as well.			

Dry Pack

All SMD optical devices are **MOISTURE SENSITIVE**. Avoid exposure to moisture at all times during transportation or storage. Every reel is packaged in a moisture protected anti-static bag. Each bag is properly sealed prior to shipment.

Upon request, a humidity indicator will be included in the moisture protected anti-static bag prior to shipment.

The packaging sequence is as follows:

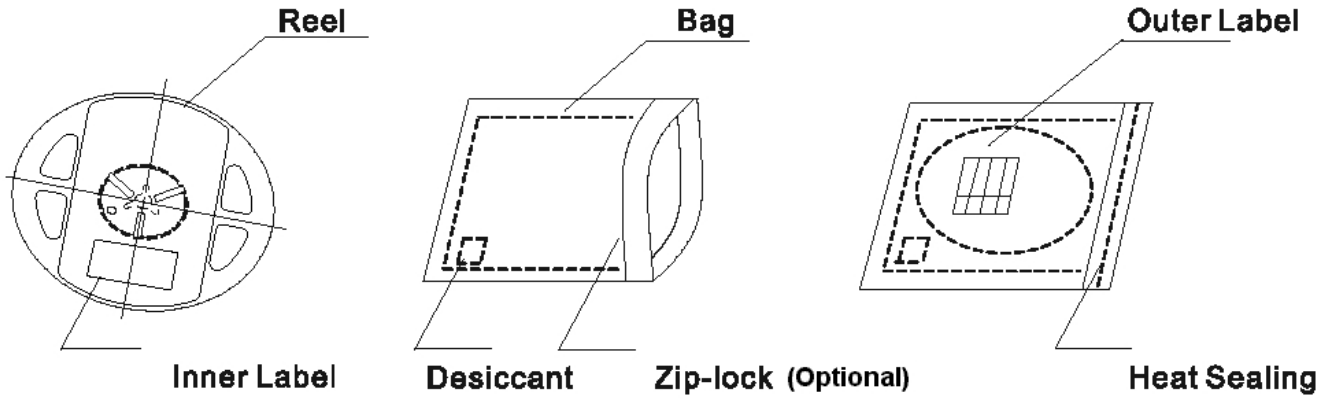

Reflow Soldering

- Recommended tin glue specifications: melting temperature in the range of 178~192 ^{O}C
- The recommended reflow soldering profile is as follows (temperatures indicated are as measured on the surface of the LED resin):

Lead-free Solder Profile

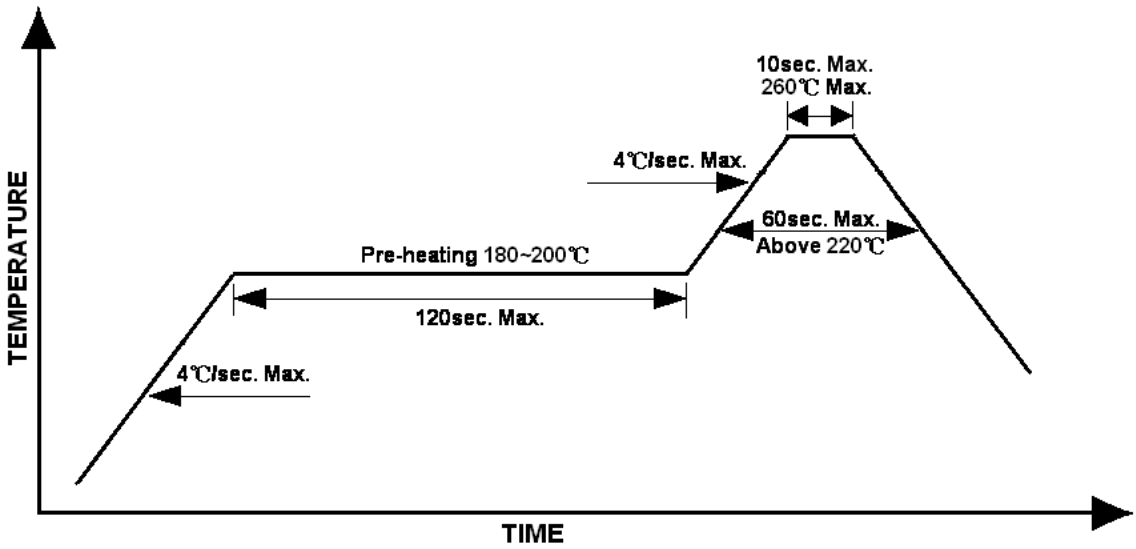

Precautions

- Avoid exposure to moisture at all times during transportation or storage.
- Anti-Static precaution must be taken when handling GaN, InGaN, and AlInGaP products.
- It is suggested to connect the unit with a current limiting resistor of the proper size. Avoid applying a reverse voltage.
- Avoid operation beyond the limits as specified by the absolute maximum ratings.
- Avoid direct contact with the surface through which the LED emits light.
- If possible, assemble the unit in a clean room or dust-free environment.

Reworking

- Rework should be completed within 5 seconds under 260 ^{O}C.
- The iron tip must not come in contact with the copper foil.
- Twin-head type is preferred.

Cleaning

Following are cleaning procedures after soldering:

- An alcohol-based solvent such as isopropyl alcohol (IPA) is recommended.
- Temperature x Time should be 50°C x 30sec. or <30°C x 3min
- Ultra sonic cleaning: < 15W/ bath; bath volume ≤ 1liter
- Curing: 100 ^{O}C max, <3min

Cautions of Pick and Place

- Avoid stress on the resin at elevated temperature.
- Avoid rubbing or scraping the resin by any object.
- Electro-static may cause damage to the component. Please ensure that the equipment is properly grounded. Use of an ionizer fan is recommended.

Reliability

Item	Frequency/ lots/ samples/ failures	Standards Reference	Conditions
Precondition	For all reliability monitoring tests according to JEDEC Level 2	J-STD-020	1.) Baking at 85°C for 24hrs 2.) Moisture storage at 85°C/ 60% R.H. for 168hrs
Solderability	1Q/ 1/ 22/ 0	JESD22-B102-B And CNS-5068	Accelerated aging 155°C/ 24hrs Tinning speed: 2.5+0.5cm/s Tinning: A: 215°C/ 3+1s or B: 260°C/ 10+1s
Resistance to soldering heat		CNS-5067	Dipping soldering terminal only Soldering bath temperature A: 260+/-5°C; 10+/-1s B: 350+/-10°C; 3+/-0.5s
Operating life test	1Q/ 1/ 40/ 0	CNS-11829	1.) Precondition: 85°C baking for 24hrs 85°C/ 60%R.H. for 168hrs 2.) Tamb25°C; IF=20mA; duration 1000hrs
High humidity, high temperature bias	1Q/ 1/ 45/ 0	JESD-A101-B	Tamb: 85°C Humidity: 85% R.H., IF=5mA Duration: 1000hrs
High temperature bias	1Q/ 1/ 20	IN specs.	Tamb: 55°C IF=20mA Duration: 1000hrs
Pulse life test	1Q/ 1/ 40/ 0		Tamb25°C, If=20mA,, Ip=100mA, Duty cycle=0.125 (tp=125 μs,T=1sec) Duration 500hrs)
Temperature cycle	1Q/ 1/ 76/ 0	JESD-A104-A IEC 68-2-14, Nb	A cycle: -40 degree C 15min; +85 degree C 15min Thermal steady within 5 min.. 300 cycles 2 chamber/ Air-to-air type
High humidity storage test	1Q/ 1/ 40/ 0	CNS-6117	60+3°C 90+5/-10% R.H. for 500hrs
High temperature storage test	1Q/ 1/ 40/ 0	CNS-554	100+10°C for 500hrs
Low temperature storage test	1Q/ 1/ 40/ 0	CNS-6118	-40+5°C for 500hrs

Revision History

Changes since last revision	Page	Version No.	Revision Date
Initial Release		V1.0	05-12-2017
Updated	1	V1.1	02-11-2022

DISCLAIMER

INOLUX reserves the right to make changes without further notice to any products herein to improve reliability, function or design. INOLUX does not assume any liability arising out of the application or use of any product or circuit described herein; neither does it convey any license under its patent rights, nor the rights of others.

LIFE SUPPORT POLICY

INOLUX's products are not authorized for use as critical components in life support devices or systems without the express written approval of the President of INOLUX or INOLUX CORPORATION. As used herein:
1. Life support devices or systems are devices or systems which, (a) are intended for surgical implant into the body, or (b) support or sustain life, and (c) whose failure to perform when properly used in accordance with instructions for use provided in the labeling, can be reasonably expected to result in a significant injury of the user.
2. A critical component in any component of a life support device or system whose failure to perform can be reasonably expected to cause the failure of the life support device or system, or to affect its safety or effectiveness.