Features

- 5050 with integrated high-quality constant current IC and RGB LED chip.
- Single line data transmission (return to zero code).
- Specific Shaping Transmit Technology - theoretically the number of cascaded LEDs is not restricted, but in practice the cascade length is limited by refresh-rate, power-distribution and signal-integrity requirements.
- Data transfer frequency can reach 800kbps (typical). When there's 1024 LEDs in a single string, the refresh rate can reach 30 frames per second.
- 256-level PWM grayscale control for each RGB channel.
- Built-in reverse-polarity protection prevents IC damage caused by reverse power connection.

Description

The IN-PI55TAT(X)R(X)G(X)B is 5.0*5.0*1.6 mm RGB LED with integrated IC. It is a SMD type LED which can be used in various applications.

Applications

- Full color LED string light
- LED full color module
- LED guardrail tube
- LED scene lighting
- LED point light
- LED pixel screen
- LED shaped screen

Package Outline Dimensions & Pin Configuration

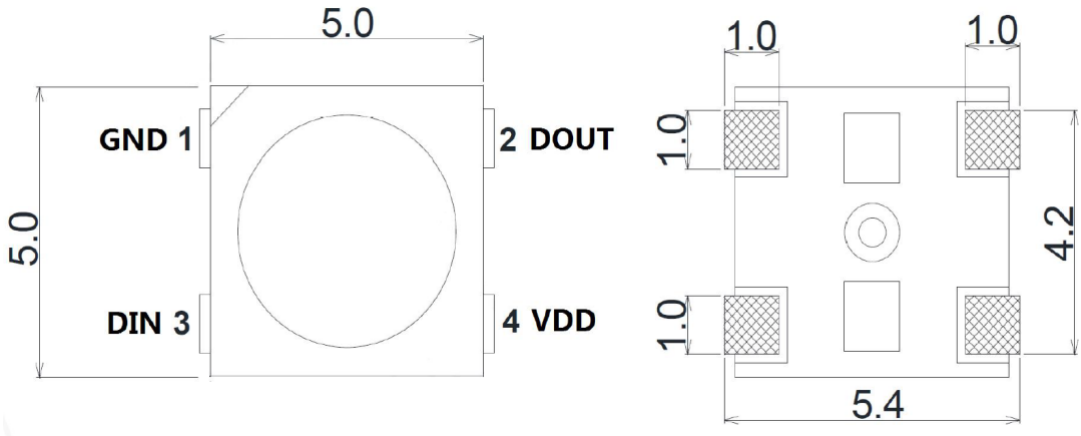

Figure 1. IN-PI55TAT(X)R(X)G(X)B Package Outline Dimensions

Pin Configuration

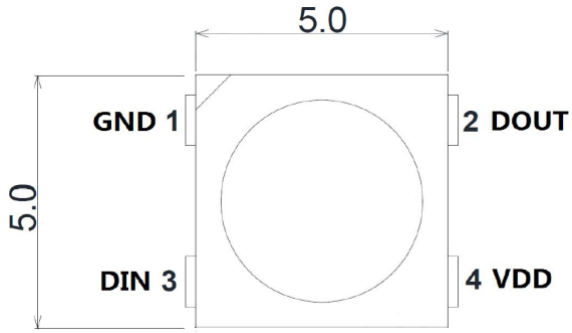

Figure 2. IN-PI55TAT(X)R(X)G(X)B Pin Configuration

Notes:
1. Dimension in millimeter, tolerance is ±0.1mm unless otherwise noted.

Number	Symbol	Function Description
1	GND	Ground
2	DOUT	Control data signal output
3	DIN	Control data signal input
4	VDD	Power supply LED

Soldering Pad Size

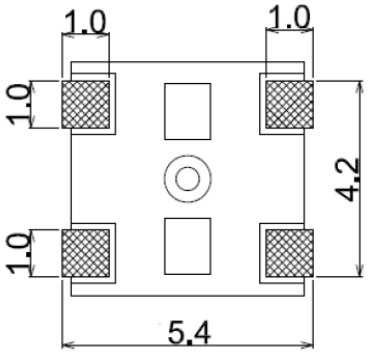

Pad Size

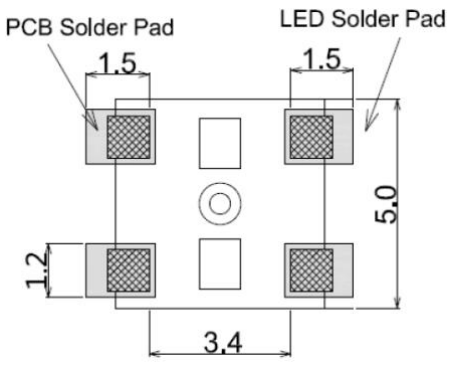

Steel mesh size

Notes:
1. Dimensions are in millimeters, tolerance is ±0.1mm unless otherwise noted.

Absolute Maximum Rating *(Ta = 25 ℃)*

Parameter	Symbol	Range	Unit
Logic supply voltage	V_{DD}	+3.7～+5.4	V
Logic input voltage	V_{IN}	-0.4 ~VDD+0.4	V
OUT R/G/B port withstand voltage	BV_{OUT}	16	V
Operating temperature	T_{OPT}	−30 ~ +85	°C
Storage temperature	T_{STG}	−40 ~ +90	°C
ESD Withstand Pressure (HBM)	V_{ESD}	4K	V
ESD Withstand Pressure (DM)	V_{ESD}	200	V

LED Characteristics *(T_a = 25℃)*

Color	IN-PI55TAT5R5G5B (5mA Max. per LED Chip)		IN-PI55TATPRPGPB (12mA Max. per LED Chip)	
	Wavelength(nm)	Light Intensity(mcd)	Wavelength(nm)	Light Intensity(mcd)
Red	620-630	100-200	620-630	400-700
Green	520-535	400-700	520-535	1000-1500
Blue	460-475	50-100	460-475	200-400

Recommended Operating Ranges

Parameter	Symbol	Min.	Typ.	Max	Unit	Test conditions
Supply voltage	V_{DD}	-	5.0	-	V	-
High level input voltage	V_{IH}	0.7*VDD	-		V	VDD=5.0V
Low level input voltage	V_{IL}	-	-	0.3*VDD	V	VDD=5.0V
DOUT output current	I_{OH}	-	-40	-		DOUT output is high, and 10 Ω resistance is connected in series to GND
DOUT perfusion current	I_{OL}	-	40	-		The output of DOUT is low, and the power supply injects current to DOUT
OUT R/G/B constant current knee point voltage	V_{DS_S}	-	0.7	-		Iout=5mA/12mA(max)
OUT R/G/B output current	I_{OUT_R}	-	12	-		V_{DS_R}=1V
The frequency of PWM	F_{PWM}	-	1.2	-	kHz	-
Static Supply Current	I_{DD}	-	0.5	-	mA	VDD=4.5V Iout "OFF"

Switching Characteristics

Parameter	Symbol	Min.	Typ.	Max	Unit	Test conditions
The speed of data transmission	*fDIN*	-	800	-	kbps	The duty ratio of 50% (data 1)
DOUT transmission delay	T_{PLH}	-	80	-	ns	The earth load capacitance of the DOUT port is 30pf.
	T_{PHL}	-	80	-	ns	
I_{OUT} Rise/Fall Time	T_r	-	50	-	ns	IOUT R/G/B = 12mA, out port is connected with 200 Ω resistors to VDD in series, and the load capacitance to ground is 15pf
	T_f	-	100	-	ns	

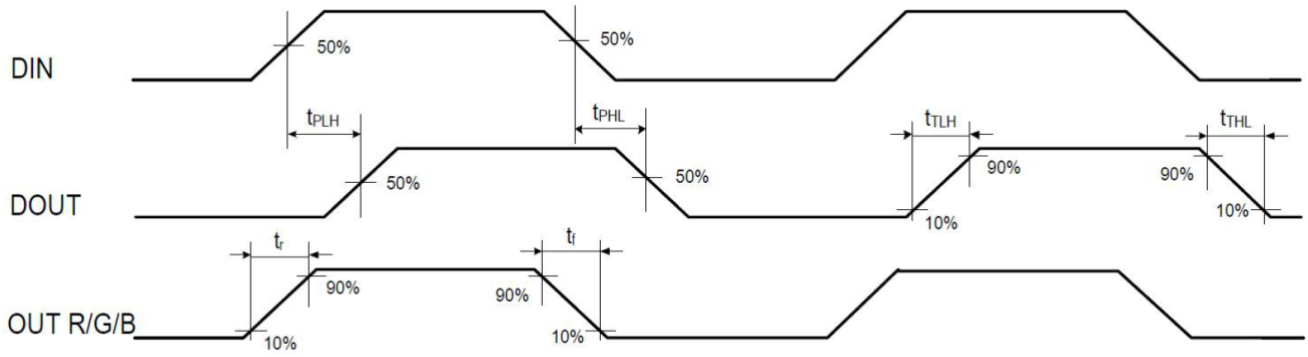

Timing Waveforms

1. Input Code

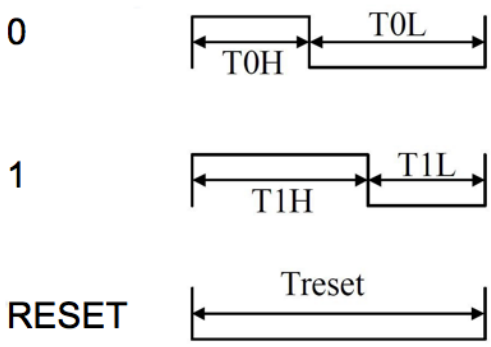

2. The data transmission time:

Name	Description	Min.	Typ.	Max.	Unit
T0H	0 code, high level time	-	0.3μs	-	μs
T0L	0 code, low level time	-	0.9μs	-	μs
T1H	1 code, high level time	-	0.6μs	-	μs
T1L	1 code, low level time	-	0.6μs	-	μs
Trst	Reset code, low level time	200	-	-	μs

3. Connection Scheme

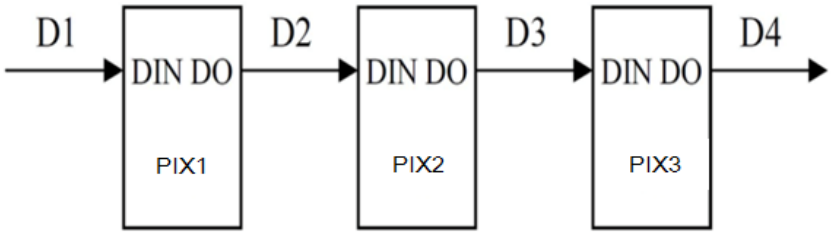

4. Data Transfer Format

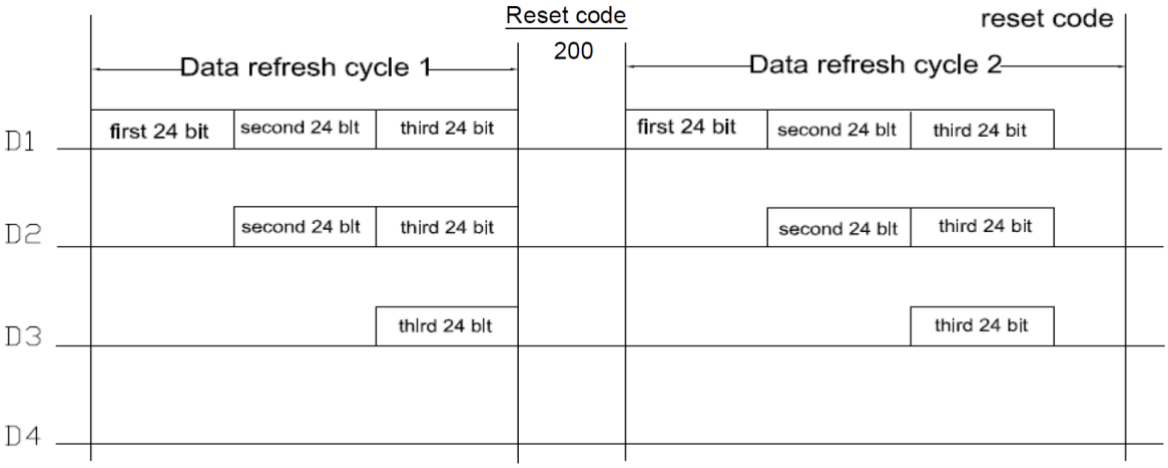

Note: the D1 sends data for MCU, D2, D3, D4 for data forwarding automatic shaping cascade circuit.

5. 24-bit data format

G7	G6	G5	G4	G3	G2	G1	G0	R7	R6	R5	R4
R3	R2	R1	R0	B7	B6	B5	B4	B3	B2	B1	B0

Note: high starting, in order to send data (G7 - G6 - ....B0)

Typical Application Circuit

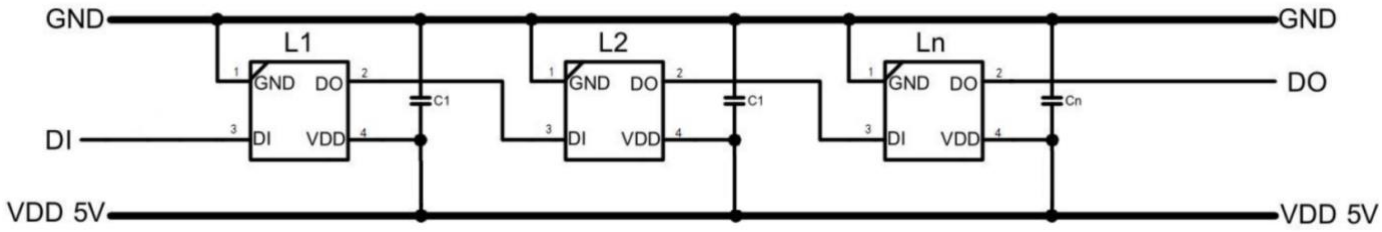

Note: C1 is the filter capacitor of LED VDD pin, the general value is 100nf

LED Performance Graph

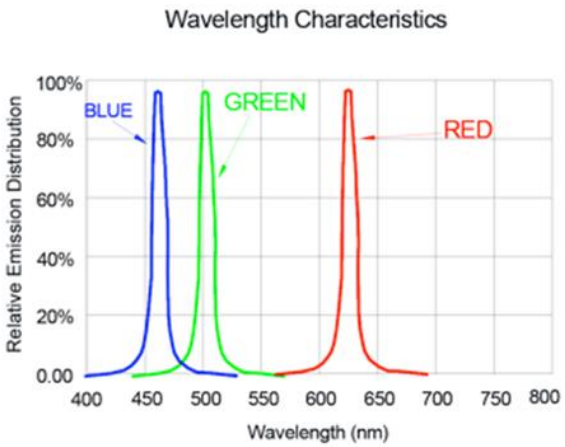

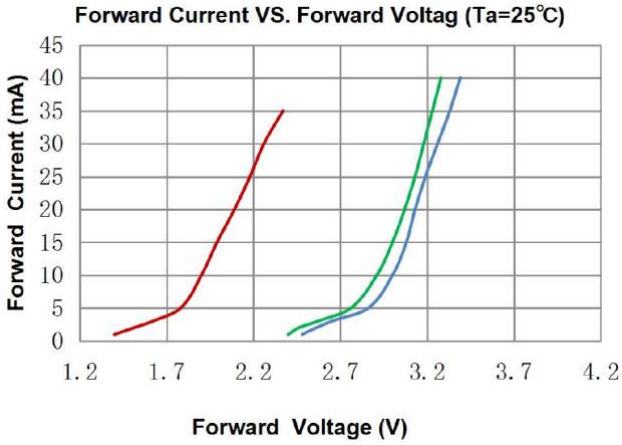

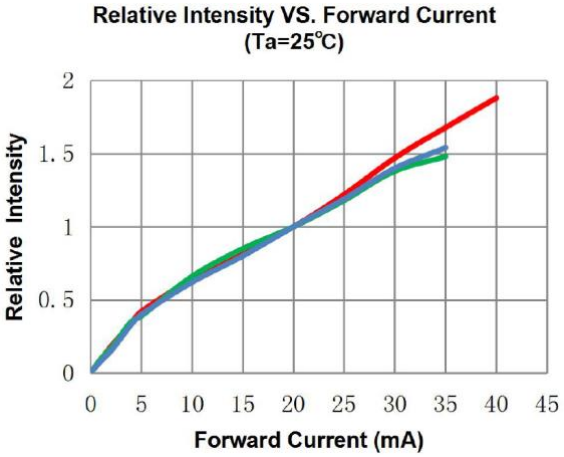

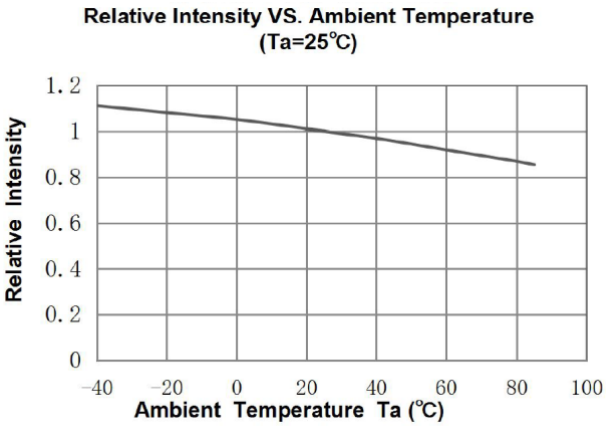

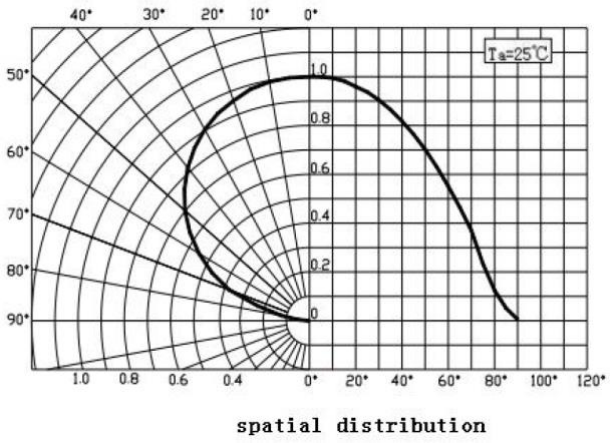

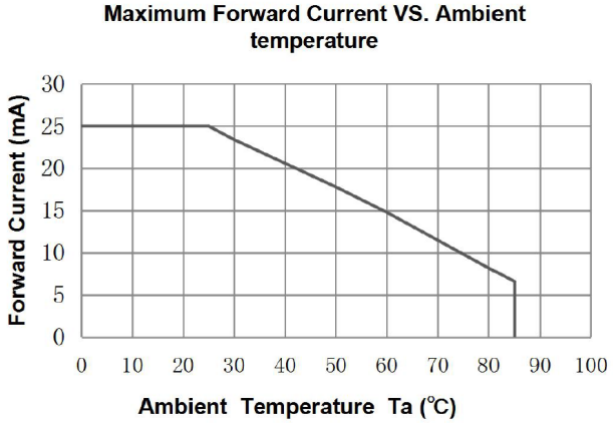

Ordering Information

Product	Emission Color	IV(mcd)	Orderable Part Number
IN-PI55TAT5R5G5B	R	100-200	IN-PI55TAT5R5G5B
	G	400-700	
	B	50-100	
IN-PI55TATPRPGPB	R	400-700	IN-PI55TATPRPGPB
	G	1000-1500	
	B	200-400	

Label Specifications

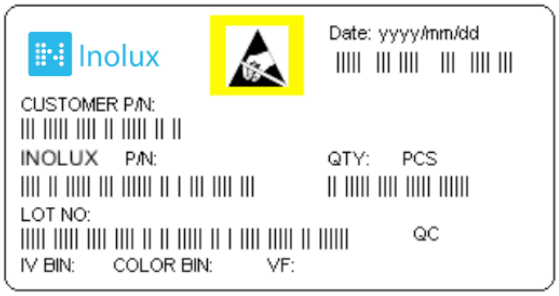

Inolux P/N:

I	N	PI	-	55	T	A	T	(X)	R	(X)	G	(X)	B	-	X	X	X	X
Inolux		Product		Package	Die Qty.	Variation	Orientation	Current	Color	Current	Color	Current	Color		Customized Stamp-off			
		PI- Single trace IC PC- Clock Function IC		55TA = 5.0 x 5.0 x 1.6 mm (4 pins)			T = Top Mount	P=12mA 5 = 5mA	R = 624 nm	P=12mA 5 = 5mA	G = 520 nm	P=12mA 5 = 5mA	B = 470 nm					

Lot No.:

Z	2	0	1	7	01	24	001
Internal Tracker	Year (2017, 2018, …..)				Month	Date	Serial

Packaging

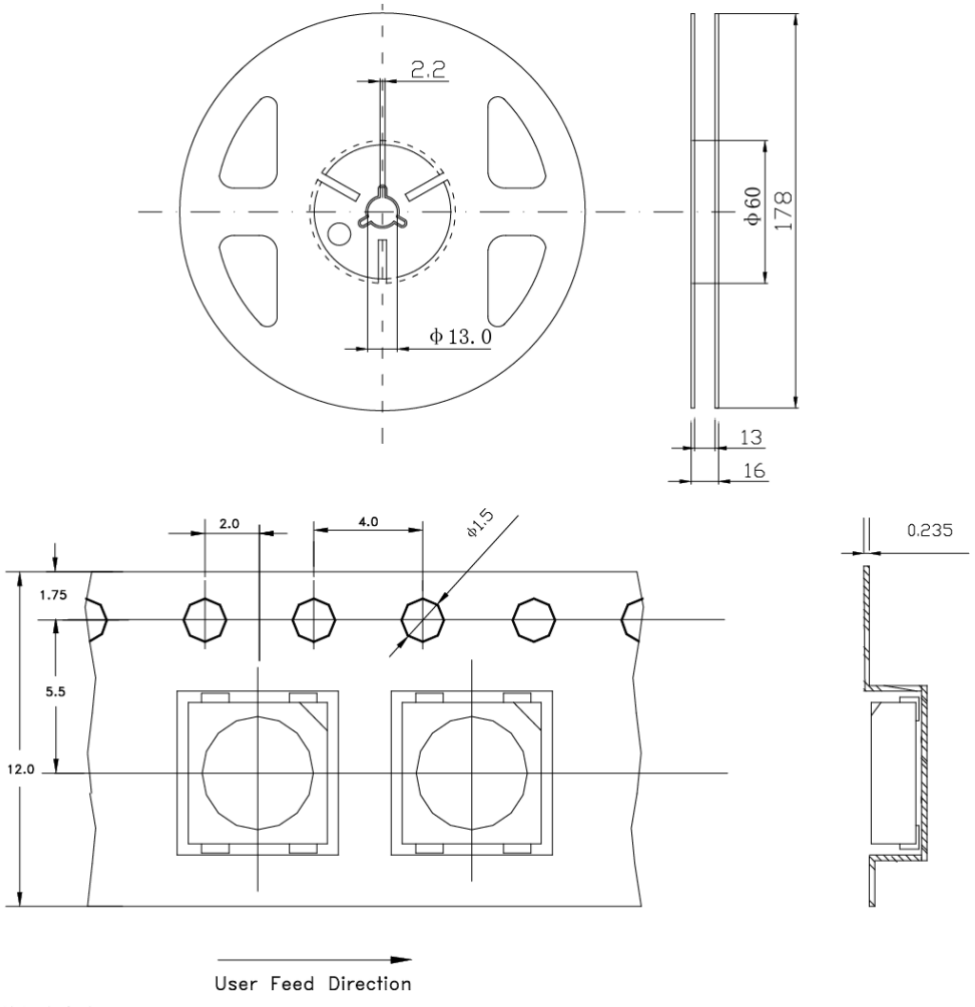

Notes:
1. All dimensions are in millimeters.
2. Tolerance is ±0.1 mm unless otherwise noted.

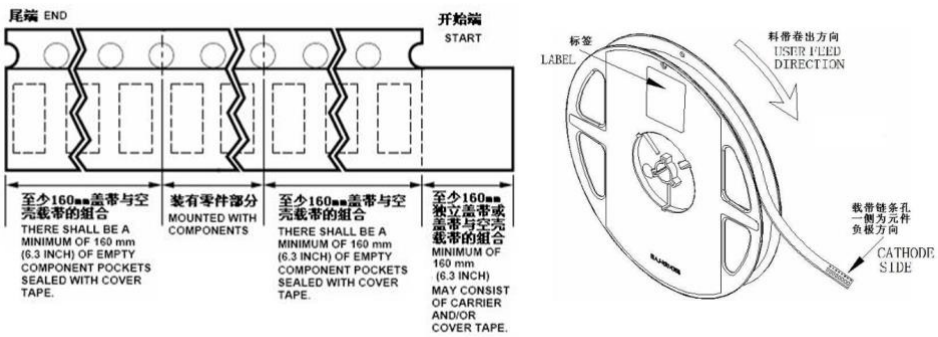

Precautions

Please read the following notes before using the product:

1. Storage

1.1 Do not open moisture proof bag before the products are ready to use.

1.2 Before opening the package, the LEDs should be kept at 30℃ or less and 80%RH or less.

1.3 The LEDs should be used within a year.

1.4 After opening the package, the LEDs should be kept at 30℃ or less and 60%RH or less.

1.5 The LEDs should be used within 24 hours (1 days) after opening the package.

1.6 If the moisture adsorbent material has evaporated or the LEDs have exceeded the storage time, baking treatment should be performed using the following conditions. Baking treatment: 60±5℃ for 24 hours.

2. Soldering Condition

Recommended soldering conditions:

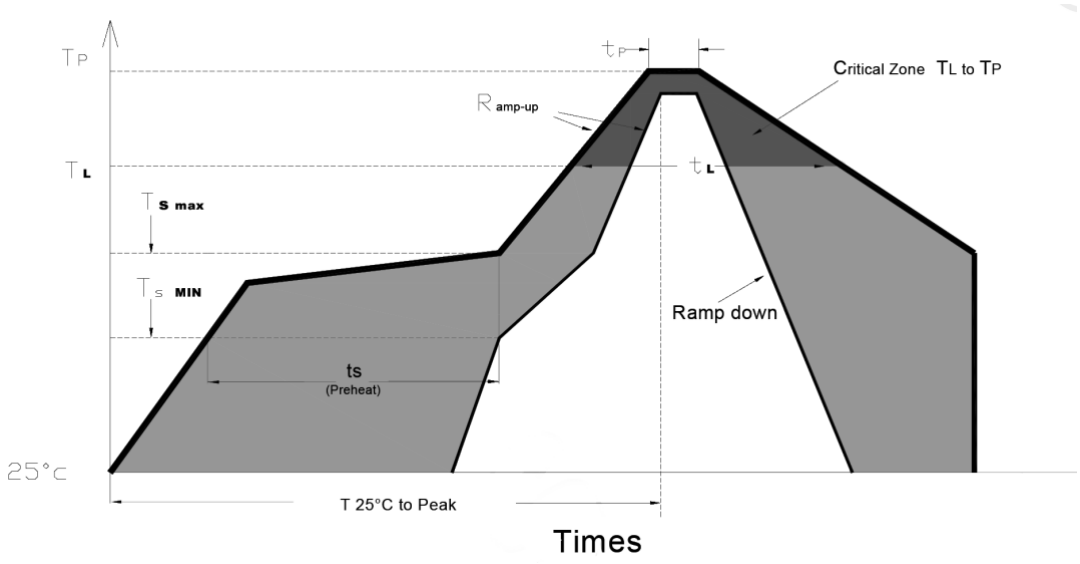

Profile Feature	Lead-Free Solder
Average Ramp-Up Rate ($T_{s\ max}$ to Tp)	3℃/second max.
Preheat: Temperature Min ($T_{s\ min}$)	150℃
Preheat: Temperature Max ($T_{s\ max}$)	200℃
Preheat: Time ($t_{s\ min}$ to $t_{s\ max}$)	60-180 seconds
Time Maintained Above: Temperature (T_L)	217 ℃
Time Maintained Above: Time (t_L)	60-150 seconds
Peak/Classification Temperature (T_P)	240 ℃
Time Within 5℃ of Actual Peak Temperature (tp)	<10 seconds
Ramp-Down Rate	6℃/second max.
Time 25 ℃ to Peak Temperature	<6 minutes max.

Note: Excessive soldering temperature and / or time might result in deformation of the LED lens or catastrophic failure of the LED.

3. Soldering Iron

Each terminal is to go to the tip of soldering iron temperature less than 260℃ for 5 seconds within once in less than the soldering iron capacity 25W. Leave two seconds and more intervals and do soldering of each terminal. Be careful because the damage of the product is often started at the time of the hand solder.

4. Repairing

Repair should not be done after the LEDs have been soldered. When repairing is unavoidable, a double-head soldering iron should be used (as below figure). It should be confirmed beforehand whether the characteristics of the LEDs will or will not be damaged by repairing.

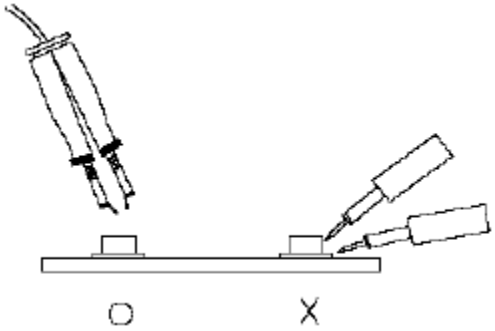

5. Caution in ESD

Static Electricity and surge damages the LED. It is recommended to use a wristband or anti-electrostatic glove when handling the LED. All devices, equipment and machinery must be properly grounded.

Revision History

Changes since last revision	Page	Version No.	Revision Date
Initial Release		1.0	05-31-2018
Format Adjustment		1.1	07-01-2018
Format Adjustment		1.2	08-07-2018
Revise the Spec.	P3	1.3	12-25-2018
Revise the Drawing and Spec.	P1-P8	1.4	02-04-2021
Revise the Wording	P6	1.5	01-03-2023
Revise the Drawing.	P7	1.6	07-26-2023
Add packaging information	P10	1.7	03-05-2024-
Format adjustment		1.8	09-08-2026

DISCLAIMER

INOLUX reserves the right to make changes without further notice to any products herein to improve reliability, function or design. INOLUX does not assume any liability arising out of the application or use of any product or circuit described herein; neither does it convey any license under its patent rights, nor the rights of others.

LIFE SUPPORT POLICY

INOLUX's products are not authorized for use as critical components in life support devices or systems without the express written approval of the President of INOLUX or INOLUX CORPORATION. As used herein:
1. Life support devices or systems are devices or systems which, (a) are intended for surgical implant into the body, or (b) support or sustain life, and (c) whose failure to perform when properly used in accordance with instructions for use provided in the labeling, can be reasonably expected to result in a significant injury of the user.
2. A critical component in any component of a life support device or system whose failure to perform can be reasonably expected to cause the failure of the life support device or system, or to affect its safety or effectiveness.